Work Order ID 52202

September 17, 2009 1:46:57 PM

Item ID: D3943-041
Revision ID: A
Item Name: Ground Handlling Crank Assembly

Accept

Setup Start
Stop

Start Date: 09/17/2009 **Start Qty:** 1.00
Required Date: 09/23/2009 **Req'd Qty:** 1.00
Reference:

Cust Item ID:
Customer:

Run Start
Stop

Approvals: **Process Plan:** _____ **Date:** _____ **Tooling:** _____ **Date:** _____
QC: _____ **Date:** _____ **SPC (Y/N):** _____ **Date:** _____

Sequence ID/ Work Center ID	Operation Description	Set Up/ Run Hours	Draw Number	Draw Rev.	Plan Code	Accept Qty	Reject Qty	Reject Number	Insp. Stamp
100		0.00							
Purchasing	**Memo**	0.00							
Purchasing	Issue P/O: _____ Purchase Part Number: 8143919 Supplier: Princess Auto Certificate of conformity is required Description: 4000 lbs lever chain hoist								
110	Receive & Inspect for Damage & Mat'l Certs	0.00							
Packaging	**Memo**	0.00							
Packaging	Ensure material certification is attached								

Draw Nbr	Revision Nbr

N/A

See previous w/o #51244 D3943-041 was closed.

Dart Aerospace Ltd

W/O:		WORK ORDER CHANGES					
DATE	STEP	PROCEDURE CHANGE	By	Date	Qty	Approval Chief Eng / Prod Mgr	Approval QC Inspector

Part No: _____ **PAR #:** _____ **Fault Category:** _____ **NCR:** Yes No **DQA:** _____ **Date:** _____

Resolution: _____ **Disposition:** _____ **QA: N/C Closed:** _____ **Date:** _____

NCR:		WORK ORDER NON-CONFORMANCE (NCR)						
DATE	STEP	Description of NC Section A	Corrective Action Section B			Verification Section C	Approval Chief Eng	Approval QC Inspector
			Initial Chief Eng	Action Description Chief Eng	Sign & Date			

NOTE: Date & initial all entries

H:\FORMS\Quality Assurance\approved QA\NCRWO RevE

Work Order ID 52202

September 17, 2009 1:46:57 PM

Item ID: D3943-041
Revision ID: A
Item Name: Ground Handlling Crank Assembly

Accept

Setup Start
Stop

Start Date: 09/17/2009 **Start Qty:** 1.00
Required Date: 09/23/2009 **Req'd Qty:** 1.00
Reference:

Cust Item ID:
Customer:

Run Start
Stop

Approvals: **Process Plan:** _____ **Date:** _____ **Tooling:** _____ **Date:** _____
QC: _____ **Date:** _____ **SPC (Y/N):** _____ **Date:** _____

Sequence ID/ Work Center ID	Operation Description	Set Up/ Run Hours	Draw Number	Draw Rev.	Plan Code	Accept Qty	Reject Qty	Reject Number	Insp. Stamp
120	QC6- Inspect dimensions to drawing	0.00							
QC	Memo	0.00							
Quality Control									
130		0.00							
Large Fab	Memo	0.00							
Large Fab	1-Disassemble chain host as per dwg								
	2-Drill handle ass'y (D3943-051) as per dwg								
	~~3-Weld D3943-7 stud and D3943-5 plate as per dwg~~								
	~~4-Weld D3954-5 and -9 to supplied chain, discard hooks~~								
	A/R Steel Welding Rod Batch:_____								

09.09.21

09.09.21

09.09.21

not required

Step is in D3943-053 estimate

09.09.22

Dart Aerospace Ltd

W/O:		WORK ORDER CHANGES					
DATE	STEP	PROCEDURE CHANGE	By	Date	Qty	Approval Chief Eng / Prod Mgr	Approval QC Inspector

Part No: _____ **PAR #:** _____ **Fault Category:** _____ **NCR:** Yes No **DQA:** _____ **Date:** _____

Resolution: _____ **Disposition:** _____ **QA: N/C Closed:** _____ **Date:** _____

NCR:		WORK ORDER NON-CONFORMANCE (NCR)						
DATE	STEP	Description of NC Section A	Corrective Action Section B			Verification Section C	Approval Chief Eng	Approval QC Inspector
			Initial Chief Eng	Action Description Chief Eng	Sign & Date			

NOTE: Date & initial all entries

H:\fFORMS\Quality Assurance\approved QA\NCRWO RevE

Work Order ID 52202

September 17, 2009 1:46:57 PM

Item ID: D3943-041
Revision ID: A
Item Name: Ground Handlling Crank Assembly

Accept

Setup Start
Stop

Start Date: 09/17/2009 **Start Qty:** 1.00
Required Date: 09/23/2009 **Req'd Qty:** 1.00
Reference:

Cust Item ID:
Customer:

Run Start
Stop

Approvals: **Process Plan:** _____ **Date:** _____ **Tooling:** _____ **Date:** _____
QC: _____ **Date:** _____ **SPC (Y/N):** _____ **Date:** _____

Sequence ID/ Work Center ID	Operation Description	Set Up/ Run Hours	Draw Number	Draw Rev.	Plan Code	Accept Qty	Reject Qty	Reject Number	Insp. Stamp
140	QC5- Inspect part completeness to step on W/O	0.00							
QC	Memo	0.00							
Quality Control									
150	~~QC9- Inspect visual per QSI004- Fusion Welds~~	0.00							
QC	Memo	0.00							
Quality Control									

=> 8 02/03/23

n/a
8

Dart Aerospace Ltd

W/O:		WORK ORDER CHANGES					
DATE	STEP	PROCEDURE CHANGE	By	Date	Qty	Approval Chief Eng / Prod Mgr	Approval QC Inspector

Part No: _____ **PAR #:** _____ **Fault Category:** _____ **NCR:** Yes No **DQA:** _____ **Date:** _____

Resolution: _____ **Disposition:** _____ **QA: N/C Closed:** _____ **Date:** _____

NCR:		WORK ORDER NON-CONFORMANCE (NCR)						
DATE	STEP	Description of NC Section A	Corrective Action Section B			Verification Section C	Approval Chief Eng	Approval QC Inspector
			Initial Chief Eng	Action Description Chief Eng	Sign & Date			

NOTE: Date & initial all entries

H:\fFORMS\Quality Assurance\approved QA\NCRWO RevE

Work Order ID 52202

September 17, 2009 1:46:57 PM

Item ID: D3943-041 **Accept** **Setup Start** **Stop**

Revision ID: A

Item Name: Ground Handlling Crank Assembly

Start Date: 09/17/2009 **Start Qty:** 1.00 **Cust Item ID:**

Required Date: 09/23/2009 **Req'd Qty:** 1.00 **Customer:**

Reference:

Run Start **Stop**

Approvals: **Process Plan:** _____ **Date:** _____ **Tooling:** _____ **Date:** _____

QC: _____ **Date:** _____ **SPC (Y/N):** _____ **Date:** _____

Sequence ID/ Work Center ID	Operation Description	Set Up/ Run Hours	Draw Number	Draw Rev.	Plan Code	Accept Qty	Reject Qty	Reject Number	Insp. Stamp
160	Fire Red(Ref:4.3.5.10) per QSI005 4.3	0.00							
Powdercoat									
Powder Coating	Spray paint M112733 **Memo**	0.00							
	*******mask chain as per dwg*****								
	Powder Coat handle (D3943-051) and chain lug (D3943-5) as per dwg Fire Red (Ref: 4.3.5.10) as per QSI 005 4.3								
	START TIME: _____								
	OVEN TEMPERATURE: _____								
	FINISH TIME: _____								
						1B 09 09.22			
170	~~QC3~~ Inspect Part Finish	0.00							
QC	QC14 **Memo**	0.00				27 S 09/08/23			
Quality Control									

Dart Aerospace Ltd

W/O:		WORK ORDER CHANGES					
DATE	STEP	PROCEDURE CHANGE	By	Date	Qty	Approval Chief Eng / Prod Mgr	Approval QC Inspector

Part No: _____ **PAR #:** _____ **Fault Category:** _____ **NCR:** Yes No **DQA:** _____ **Date:** _____

Resolution: _____ **Disposition:** _____ **QA: N/C Closed:** _____ **Date:** _____

NCR:		WORK ORDER NON-CONFORMANCE (NCR)						
DATE	STEP	Description of NC Section A	Corrective Action Section B			Verification Section C	Approval Chief Eng	Approval QC Inspector
			Initial Chief Eng	Action Description Chief Eng	Sign & Date			

NOTE: Date & initial all entries

H:\fFORMS\Quality Assurance\approved QA\NCRWO RevE

Work Order ID 52202

September 17, 2009 1:46:57 PM

Item ID: D3943-041 **Accept** **Setup Start** **Stop**

Revision ID: A

Item Name: Ground Handlling Crank Assembly

Start Date: 09/17/2009 **Start Qty:** 1.00 **Cust Item ID:**

Required Date: 09/23/2009 **Req'd Qty:** 1.00 **Customer:**

Reference:

Run Start **Stop**

Approvals: **Process Plan:** _____ **Date:** _____ **Tooling:** _____ **Date:** _____

QC: _____ **Date:** _____ **SPC (Y/N):** _____ **Date:** _____

Sequence ID/ Work Center ID	Operation Description	Set Up/ Run Hours	Draw Number	Draw Rev.	Plan Code	Accept Qty	Reject Qty	Reject Number	Insp. Stamp
180	Pick Kit	0.00							
Packaging									
	Memo	0.00					09.09.22		
Packaging									
190		0.00							
Large Fab									
	Memo	0.00							
Large Fab	1-Assemble as per dwg		09.09.22						
	2-Calibrate as per dwg		09.09.22						
200	QC5- Inspect part completeness to step on W/O	0.00	2) 5 02/02/23						
QC									
	Memo	0.00							
Quality Control									

Dart Aerospace Ltd

W/O:		WORK ORDER CHANGES					
DATE	STEP	PROCEDURE CHANGE	By	Date	Qty	Approval Chief Eng / Prod Mgr	Approval QC Inspector

Part No: _____ **PAR #:** _____ **Fault Category:** _____ **NCR:** Yes No **DQA:** _____ **Date:** _____

Resolution: _____ **Disposition:** _____ **QA: N/C Closed:** _____ **Date:** _____

NCR:		WORK ORDER NON-CONFORMANCE (NCR)						
DATE	STEP	Description of NC Section A	Corrective Action Section B			Verification Section C	Approval Chief Eng	Approval QC Inspector
			Initial Chief Eng	Action Description Chief Eng	Sign & Date			

NOTE: Date & initial all entries

H:\fFORMS\Quality Assurance\approved QA\NCRWO RevE

Work Order ID 52202

September 17, 2009 1:46:57 PM

Item ID: D3943-041
Revision ID: A
Item Name: Ground Handlling Crank Assembly

Accept

Setup Start
Stop

Start Date: 09/17/2009 **Start Qty:** 1.00
Required Date: 09/23/2009 **Req'd Qty:** 1.00
Reference:

Cust Item ID:
Customer:

Run Start
Stop

Approvals: **Process Plan:** _____ **Date:** _____ **Tooling:** _____ **Date:** _____
QC: _____ **Date:** _____ **SPC (Y/N):** _____ **Date:** _____

Sequence ID/ Work Center ID	Operation Description	Set Up/ Run Hours	Draw Number	Draw Rev.	Plan Code	Accept Qty	Reject Qty	Reject Number	Insp. Stamp
210	Identify as per dwg & Stock Location:_____ PDP	0.00							
Packaging	Memo 52165	0.00							
Packaging									
220	QC21- Final Inspection - Work Order Release	0.00							
QC	Memo	0.00							
Quality Control									

9/9/23 (1)

09/09/23

MF 09-09-23

Dart Aerospace Ltd

W/O:		WORK ORDER CHANGES					
DATE	STEP	PROCEDURE CHANGE	By	Date	Qty	Approval Chief Eng / Prod Mgr	Approval QC Inspector

Part No: _____ **PAR #:** _____ **Fault Category:** _____ **NCR:** Yes No **DQA:** _____ **Date:** _____

Resolution: _____ **Disposition:** _____ **QA: N/C Closed:** _____ **Date:** _____

NCR:		WORK ORDER NON-CONFORMANCE (NCR)						
DATE	STEP	Description of NC Section A	Corrective Action Section B			Verification Section C	Approval Chief Eng	Approval QC Inspector
			Initial Chief Eng	Action Description Chief Eng	Sign & Date			

NOTE: Date & initial all entries

H:\fFORMS\Quality Assurance\approved QA\NCRWO RevE

Picklist Print

September 17, 2009 1:46:57 PM

Work Order ID: 52202

Parent Item: D3943-041RevA

Parent Item Name: Ground Handlling Crank Assembly

Comments:

Start Date: 09/17/2009 **Required Date:** 09/23/2009

Start Qty: 1.00 **Required Qty:** 1.00

Component Item ID/ Item Name	Replacement Item ID	Mfg/ Purch	Bin Item	Primary Location	Last Location	Route Seq ID	Unit of Measure	Qty on Hand	Remaining Qty To Pick	Qty Issued	Date Issued	Status
D3943-041RevA Ground Handlling Crank Assembly		Manufactured	No				Each	2.0000	1.0000			
				Warehouse Location		**Loc Qty**		**Loc Code**				
				Main Warehouse								
				ST			2					
					51244		2			JMF 09-09-17		
D2690-4 LANYARD		Manufactured	No			180	Each	10.0000	1.0000			
				Warehouse Location		**Loc Qty**		**Loc Code**				
				Main Warehouse								
				ST			10					
					48534		10			JMF 09-09-23		
8143919 Lever Chain Hoist		Purchased	~~No~~ A.			110	Each	0.0000	1.0000			

was pulled on previous w/o. D3943-047 B51244

Dart Aerospace Ltd

W/O:		WORK ORDER CHANGES					
DATE	STEP	PROCEDURE CHANGE	By	Date	Qty	Approval Chief Eng / Prod Mgr	Approval QC Inspector

Part No: _____ **PAR #:** _____ **Fault Category:** _____ **NCR:** Yes No **DQA:** _____ **Date:** _____

Resolution: _____ **Disposition:** _____ **QA: N/C Closed:** _____ **Date:** _____

NCR:		WORK ORDER NON-CONFORMANCE (NCR)						
DATE	STEP	Description of NC Section A	Corrective Action Section B			Verification Section C	Approval Chief Eng	Approval QC Inspector
			Initial Chief Eng	Action Description Chief Eng	Sign & Date			

NOTE: Date & initial all entries

H:\fFORMS\Quality Assurance\approved QA\NCRWO RevE

Picklist Print

September 17, 2009 1:46:57 PM

Work Order ID: 52202

Parent Item: D3943-041RevA

Parent Item Name: Ground Handlling Crank Assembly

Comments:

Start Date: 09/17/2009 **Required Date:** 09/23/2009

Start Qty: 1.00 **Required Qty:** 1.00

Component Item ID/ Item Name	Replacement Item ID	Mfg/ Purch	Bin Item	Primary Location	Last Location	Route Seq ID	Unit of Measure	Qty on Hand	Remaining Qty To Pick	Qty Issued	Date Issued	Status
MS21042-4 USE MS21042L4		Purchased	No			170	Each	113.0000	1.0000			
D3943-3RevA Handle Extension		Manufactured	No			180	Each	0.0000	1.0000			
D3954-7RevA Ratchet Lug		Manufactured	No			180	Each	0.0000	1.0000			
AN960-416 Washer		Purchased	No			180	Each	182.0000	1.0000			

Used MS21042L5
M11636
09.09.22

Warehouse Location	Loc Qty	Loc Code
Main Warehouse		
ST	113	
100743	9	
5389	82	
5461	3	
6844	19	

MF 09-09-17

PTO

09.09.22 B52094

09.09.22 B52194

Used AN960-516
M112082
09.09.22

Warehouse Location	Loc Qty	Loc Code
Main Warehouse		
ST	182	
111808	149	
19356	7	
5519	26	

MF 09-09-17

PTO

Dart Aerospace Ltd

W/O: 52202		WORK ORDER CHANGES					
DATE	STEP	PROCEDURE CHANGE	By	Date	Qty	Approval Chief Eng / Prod Mgr	Approval QC Inspector
09.09.22		MS21042L4 shall be MS21042L5 AN960416 should be AN960516 Permanent Change		09.09.22	1		09.09.22

Part No: D3943-041 PAR #: _____ Fault Category: _____ NCR: Yes No DQA: _____ Date: _____

Resolution: _____ Disposition: _____ QA: N/C Closed: _____ Date: _____

NCR:		WORK ORDER NON-CONFORMANCE (NCR)						
DATE	STEP	Description of NC Section A	Corrective Action Section B			Verification Section C	Approval Chief Eng	Approval QC Inspector
			Initial Chief Eng	Action Description Chief Eng	Sign & Date			

NOTE: Date & initial all entries

H:\fFORMS\Quality Assurance\approved QA\NCRWO RevE

Picklist Print

September 17, 2009 1:46:57 PM

Work Order ID: 52202

Parent Item: D3943-041RevA

Parent Item Name: Ground Handlling Crank Assembly

Comments:

Start Date: 09/17/2009 **Required Date:** 09/23/2009

Start Qty: 1.00 **Required Qty:** 1.00

Component Item ID/ Item Name	Replacement Item ID	Mfg/ Purch	Bin Item	Primary Location	Last Location	Route Seq ID	Unit of Measure	Qty on Hand	Remaining Qty To Pick	Qty Issued	Date Issued	Status
S1475		Purchased	No			180	Each	4.0000	1.0000			
inventory												
				Warehouse Location		**Loc Qty**		**Loc Code**				
				Main Warehouse								
				ST			4					
					17303		4			MF 09-09-17		
~~AN4-10A~~		Purchased	No			180	Each	128.0000	1.0000			
~~Bolt~~												
Used AN5-10A MH0363 ~~MH1178~~ 09.09.22												PTO
				Warehouse Location		**Loc Qty**		**Loc Code**				
				Main Warehouse								
				ST			128					
					103962		8					
					108986		20			MF 09-09-17		
					111425		100					
D3585-1RevA		Manufactured	No			180	Each	21.0000	1.0000			
Set Screw												
				Warehouse Location		**Loc Qty**		**Loc Code**				
				Main Warehouse								
				ST			21					
					31571		21			MF 09-09-17		

Dart Aerospace Ltd

W/O:		WORK ORDER CHANGES					
DATE	STEP	PROCEDURE CHANGE	By	Date	Qty	Approval Chief Eng / Prod Mgr	Approval QC Inspector
09.09.22		AN4-10A should be AN5-[illegible]-11A Permanent Change	[illegible]	09.09.22	1	[illegible] 09.09.22	[illegible] 09.09.22

Part No: _____ **PAR #:** _____ **Fault Category:** _____ **NCR:** Yes No **DQA:** _____ **Date:** _____

Resolution: _____ **Disposition:** _____ **QA: N/C Closed:** _____ **Date:** _____

NCR:		WORK ORDER NON-CONFORMANCE (NCR)						
DATE	STEP	Description of NC Section A	Corrective Action Section B			Verification Section C	Approval Chief Eng	Approval QC Inspector
			Initial Chief Eng	Action Description Chief Eng	Sign & Date			

NOTE: Date & initial all entries

H:\fFORMS\Quality Assurance\approved QA\NCRWO RevE

Picklist Print

September 17, 2009 1:46:57 PM

Work Order ID: 52202

Parent Item: D3943-041RevA

Parent Item Name: Ground Handlling Crank Assembly

Comments:

Start Date: 09/17/2009 **Required Date:** 09/23/2009

Start Qty: 1.00 **Required Qty:** 1.00

Component Item ID/ Item Name	Replacement Item ID	Mfg/ Purch	Bin Item	Primary Location	Last Location	Route Seq ID	Unit of Measure	Qty on Hand	Remaining Qty To Pick	Qty Issued	Date Issued	Status
D3949-041RevA		Manufactured	No			180	Each	49.0000	1.0000			
Remove before Flight Flag Assembly												
				Warehouse Location		**Loc Qty**		**Loc Code**				
				Main Warehouse								
				ST			49					
					48280		49			MF 09-09-23		
HX-15		Purchased	No			180	Each	399.0000	3.0000			
1/4-20 UNCx3/4 S.H.C.S.												
Used one 5				**Warehouse Location**		**Loc Qty**		**Loc Code**				
one 1/4-20unc x 1" S.H.C.S.				Main Warehouse								PTO
				ST			399					
					110684		199			MF 09-09-17		
					110759		200					
D3943-051RevA		Manufactured	No			180	Each	0.0000	1.0000			
Handle Assembly										B 09 09.22	B52184	
D3943-053RevA		Manufactured	No			180	Each	0.0000	1.0000			
Chain Assembly										B 09 09.22	B52185	

Dart Aerospace Ltd

W/O:		WORK ORDER CHANGES					
DATE	STEP	PROCEDURE CHANGE	By	Date	Qty	Approval Chief Eng / Prod Mgr	Approval QC Inspector
09.09.22		Change parts list to: Qty 1 1/4-20unc x 3/4 SHCS Qty 1 1/4-20 unc x 1" SHCS		09.09.22	1	09.09.22	09.09.22
		from Qty 3 1/4-20unc x 3/4 SHCS					

Part No: _____ **PAR #:** _____ **Fault Category:** _____ **NCR:** Yes No **DQA:** _____ **Date:** _____

Resolution: _____ **Disposition:** _____ **QA: N/C Closed:** _____ **Date:** _____

NCR:		WORK ORDER NON-CONFORMANCE (NCR)						
DATE	STEP	Description of NC Section A	Corrective Action Section B			Verification Section C	Approval Chief Eng	Approval QC Inspector
			Initial Chief Eng	Action Description Chief Eng	Sign & Date			

NOTE: Date & initial all entries

H:\fFORMS\Quality Assurance\approved QA\NCRWO RevE

Picklist Print

September 17, 2009 1:46:57 PM

Work Order ID: 52202

Parent Item: D3943-041RevA

Parent Item Name: Ground Handlling Crank Assembly

Comments:

Start Date: 09/17/2009 **Required Date:** 09/23/2009

Start Qty: 1.00 **Required Qty:** 1.00

Component Item ID/ Item Name	Replacement Item ID	Mfg/ Purch	Bin Item	Primary Location	Last Location	Route Seq ID	Unit of Measure	Qty on Hand	Remaining Qty To Pick	Qty Issued	Date Issued	Status
3408A59 BALL PLUNGER		Purchased	No			180	Each	20.0000	1.0000			

Warehouse Location	Loc Qty	Loc Code
Main Warehouse		
ST	20	
111948	20	

mt 09-09-17

Dart Aerospace Ltd

W/O:		WORK ORDER CHANGES					
DATE	STEP	PROCEDURE CHANGE	By	Date	Qty	Approval Chief Eng / Prod Mgr	Approval QC Inspector

Part No: _____ **PAR #:** _____ **Fault Category:** _____ **NCR:** Yes No **DQA:** _____ **Date:** _____

Resolution: _____ **Disposition:** _____ **QA: N/C Closed:** _____ **Date:** _____

NCR:		WORK ORDER NON-CONFORMANCE (NCR)						
DATE	STEP	Description of NC Section A	Corrective Action Section B			Verification Section C	Approval Chief Eng	Approval QC Inspector
			Initial Chief Eng	Action Description Chief Eng	Sign & Date			

NOTE: Date & initial all entries

H:\fFORMS\Quality Assurance\approved QA\NCRWO RevE

ITEM No.	QTY -041	QTY -051	QTY -053	PART NUMBER	DESCRIPTION	PREFERED SUPPLIER
1	X			**D3943-041**	**GROUND HANDLING CRANK ASSEMBLY**	
5	1	X		**D3943-051**	**HANDLE ASSEMBLY**	
6	1		X	**D3943-053**	**CHAIN ASSEMBLY**	
11		1		D3943-1	HANDLE	M/F HANDLE FROM DIS-ASSEMBLED ITEM 39
12	1			D3943-3	HANDLE EXTENSION	
13		1		D3943-5	PLATE	
14		2		D3943-7	STUD	
15			1	D3943-9	CHAIN	USE CHAIN SUPPLIED WITH ITEM 39
21	1			D2690-4	LANYARD	
22	1			D3585-1	SET SCREW	
23	1			D3949-041	REMOVE BEFORE FLIGHT FLAG	
24			1	D3954-5	CHAIN LUG	
25	1			D3954-7	RATCHET LUG	
26			1	D3954-9	GWT CHAIN PIN	
31	1			AN4-10A	BOLT	
32	1			AN960-416	WASHER	
33	1			MS21042-4	NUT	
39	1			8143919	LEVER CHAIN HOIST (POWER FIST)	PRINCESS AUTO / 4000 lbs CAPACITY
41	1			S-1475	SPRING	REID SUPPLY
42	1			3408A59	BALL PLUNGER	McMASTER CARR
43	3			HX-15	SOCKET HEAD CAP SCREW $\frac{1}{4}$-20 UNC X 0.75 LG	HASKINS

52202

RELEASED 09/06/03

REV.	DESCRIPTION	BY	DATE
A	NEW ISSUE	AJS	09.05.13

DESIGN	DSTOW / AJS	**DART AEROSPACE LTD** HAWKESBURY, ONTARIO, CANADA
DRAWN	AJS	
CHECKED		DRAWING NO. D3943 — REV. A — SHEET 1 OF 5
MFG. APPR.		
APPROVED		TITLE: GROSS WEIGHT TOW CRANK ASSY — SCALE: NTS
DE APPR.	N/A	
DATE	09.05.13	

COPYRIGHT © 2009 BY DART AEROSPACE LTD
THIS DOCUMENT IS PRIVATE AND CONFIDENTIAL AND IS SUPPLIED ON THE EXPRESS CONDITION THAT IT IS NOT TO BE USED FOR ANY PURPOSE OR COPIED OR COMMUNICATED TO ANY OTHER PERSON WITHOUT WRITTEN PERMISSION FROM DART AEROSPACE LTD

Dart Aerospace Ltd

W/O:		WORK ORDER CHANGES					
DATE	STEP	PROCEDURE CHANGE	By	Date	Qty	Approval Chief Eng / Prod Mgr	Approval QC Inspector
09.09.22		Pick D2690-4 Lanyard assembly Attach to D3934-041 Flag assembly as per drawing D3943-041 Permanent change		09/09/23	1	09.09.22	09.09.22

Part No: _____ **PAR #:** _____ **Fault Category:** _____ **NCR:** Yes No **DQA:** _____ **Date:** _____

Resolution: _____ **Disposition:** _____ **QA: N/C Closed:** _____ **Date:** _____

NCR:		WORK ORDER NON-CONFORMANCE (NCR)						
DATE	STEP	Description of NC Section A	Corrective Action Section B			Verification Section C	Approval Chief Eng	Approval QC Inspector
			Initial Chief Eng	Action Description Chief Eng	Sign & Date			

NOTE: Date & initial all entries

H:\fFORMS\Quality Assurance\approved QA\NCRWO RevE

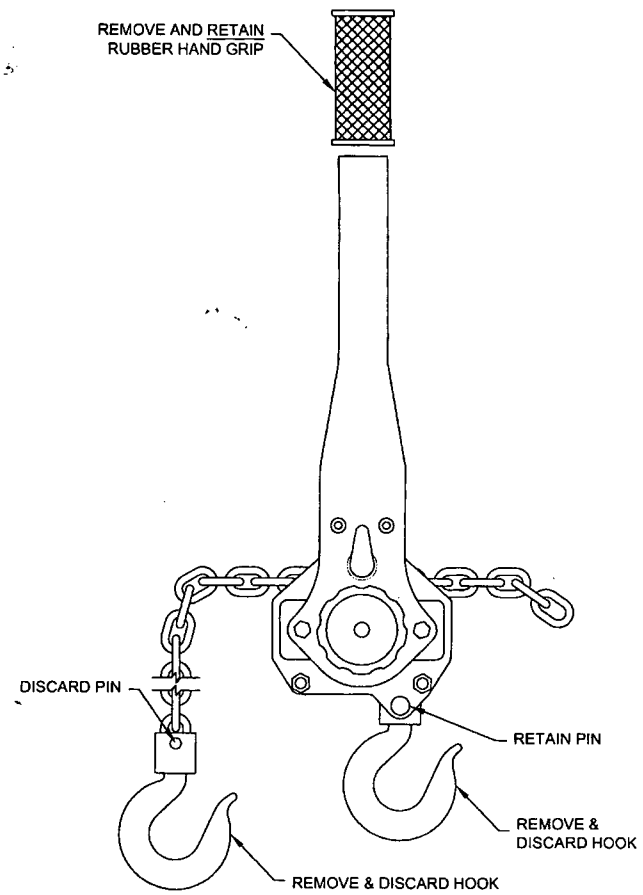

8143919 LEVER CHAIN HOIST
(SHOWN PRIOR TO MODIFICATION)
(CHAIN SHOWN SHORTENED FOR CLARITY)

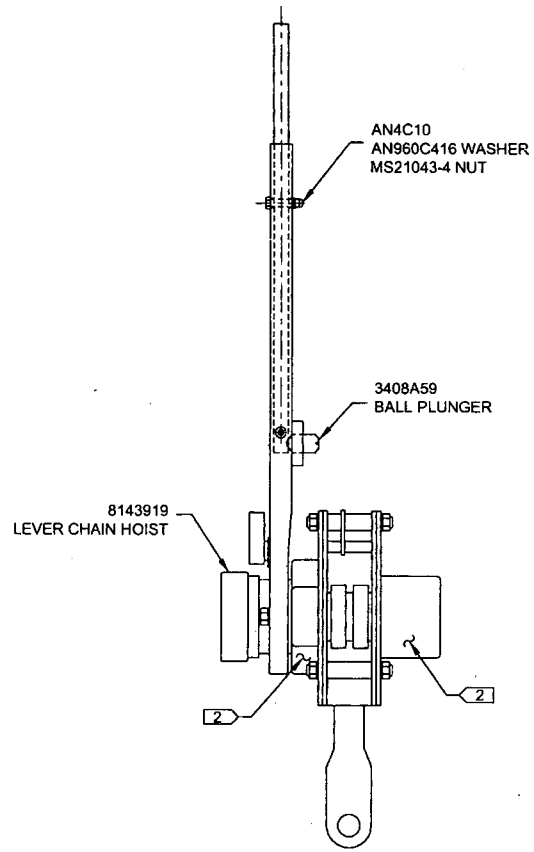

(CHAIN NOT SHOWN FOR CLAIRTY)

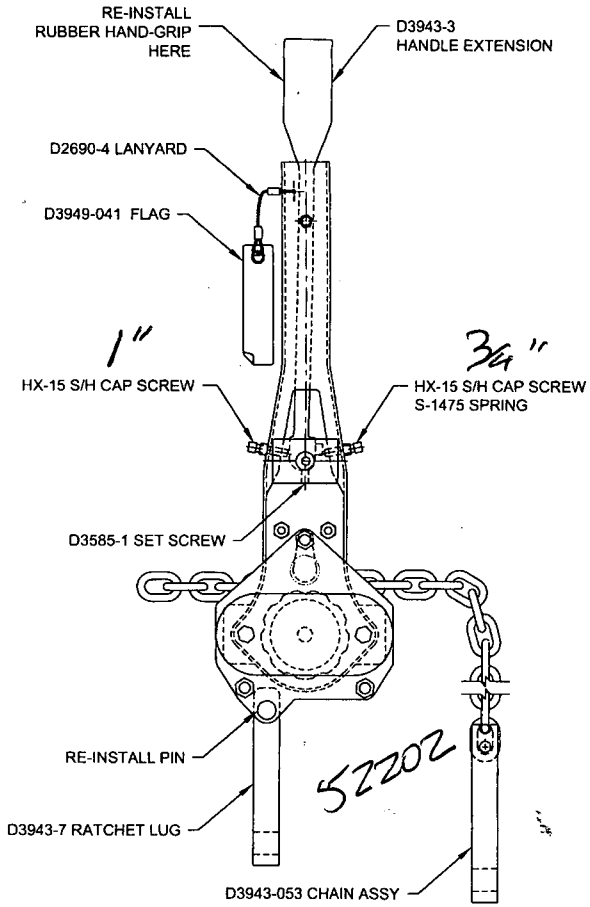

(CHAIN SHOWN SHORTENED FOR CLAIRTY)

D3943-041 GROUND HANDLING CRANK ASSEMBLY

RELEASED 09/06/03

NOTES -041:
1) MATERIAL: N/A
2) FINISH: DISASSEMBLE LEVER CHAIN HOIST (ITEM 39) AND POWDER COAT "RED" (4.3.5.10) PER DART QSI 005 4.3 PARTS INDICATED
3) TOLERANCES: PER DART QSI 018 UNLESS OTHERWISE NOTED
4) UNITS: INCHES UNLESS OTHERWISE NOTED
5) BREAK SHARP EDGES: N/A
6) IDENTIFICATION: IDENTIFY WITH DART P/N "D3943-041" USING FINE POINT PERMANENT INK MARKER

DESIGN	DSTOW/ AJS	**DART AEROSPACE LTD** HAWKESBURY, ONTARIO, CANADA
DRAWN	AJS	
CHECKED		DRAWING NO. D3943 — REV. A — SHEET 2 OF 5
MFG. APPR.		
APPROVED		TITLE: GROSS WEIGHT TOW CRANK ASSY — SCALE: NTS
DE APPR.	N/A	
DATE	09.05.13	

COPYRIGHT © 2009 BY DART AEROSPACE LTD
THIS DOCUMENT IS PRIVATE AND CONFIDENTIAL AND IS SUPPLIED ON THE EXPRESS CONDITION THAT IT IS NOT TO BE USED FOR ANY PURPOSE OR COPIED OR COMMUNICATED TO ANY OTHER PERSON WITHOUT WRITTEN PERMISSION FROM DART AEROSPACE LTD

Dart Aerospace Ltd

W/O:		WORK ORDER CHANGES					
DATE	STEP	PROCEDURE CHANGE	By	Date	Qty	Approval Chief Eng / Prod Mgr	Approval QC Inspector

Part No: _____ **PAR #:** _____ **Fault Category:** _____ **NCR:** Yes No **DQA:** _____ **Date:** _____

Resolution: _____ **Disposition:** _____ **QA: N/C Closed:** _____ **Date:** _____

NCR:		WORK ORDER NON-CONFORMANCE (NCR)						
DATE	STEP	Description of NC Section A	Corrective Action Section B			Verification Section C	Approval Chief Eng	Approval QC Inspector
			Initial Chief Eng	Action Description Chief Eng	Sign & Date			

NOTE: Date & initial all entries

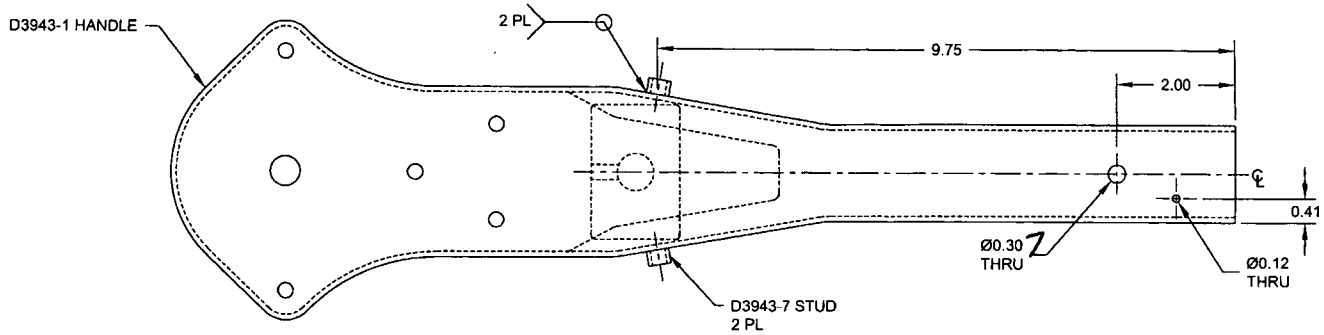

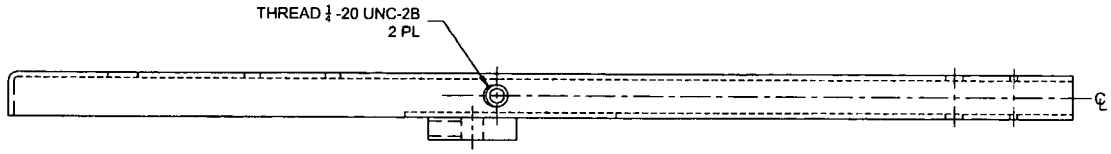

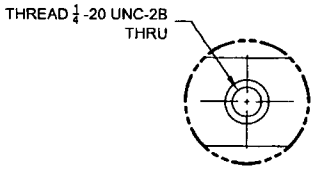

VIEW A-A A5-3 B5-3
(SCALE 2X)

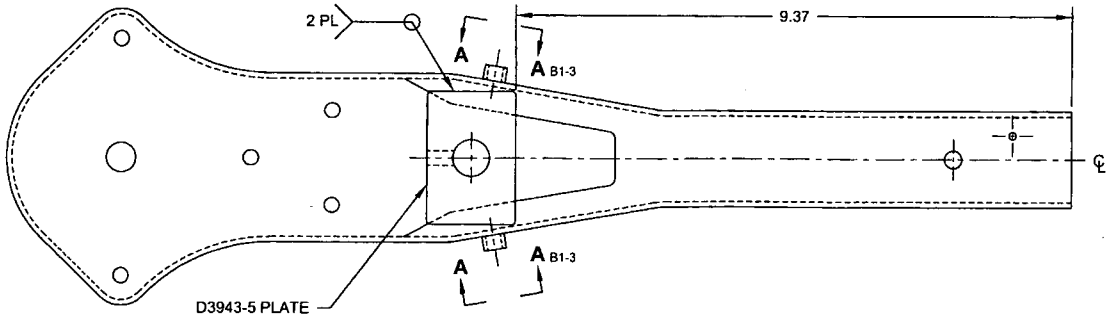

5 2 2 2

RELEASED 09/06/03

D3943-051 HANDLE ASSEMBLY

NOTES -051:
1) MATERIAL : N/A
2) FINISH: POWDER COAT "RED" (4.3.5.10) PER DART QSI 005 4.3
3) TOLERANCES: X.XX DIMENSIONS +/- 0.06 ALL OTHERS PER DART QSI 018 UNLESS OTHERWISE NOTED
4) UNITS: INCHES UNLESS OTHERWISE NOTED
5) BREAK SHARP EDGES: N/A
6) IDENTIFICATION: N/A
7) MASK ALL THREADS PRIOR TO POWDER COATING

DESIGN	DSTOW / AJS	**DART AEROSPACE LTD** HAWKESBURY, ONTARIO, CANADA
DRAWN	AJS	
CHECKED		DRAWING NO. D3943 — REV. A — SHEET 3 OF 5
MFG. APPR.		
APPROVED		TITLE: GROSS WEIGHT TOW CRANK ASSY — SCALE: NTS
DE APPR.	N/A	
DATE	09.05.13	

COPYRIGHT © 2009 BY DART AEROSPACE LTD
THIS DOCUMENT IS PRIVATE AND CONFIDENTIAL AND IS SUPPLIED ON THE EXPRESS CONDITION THAT IT IS NOT TO BE USED FOR ANY PURPOSE OR COPIED OR COMMUNICATED TO ANY OTHER PERSON WITHOUT WRITTEN PERMISSION FROM DART AEROSPACE LTD.

Dart Aerospace Ltd

W/O:		WORK ORDER CHANGES					
DATE	STEP	PROCEDURE CHANGE	By	Date	Qty	Approval Chief Eng / Prod Mgr	Approval QC Inspector

Part No: _____ PAR #: _____ Fault Category: _____ NCR: Yes No DQA: _____ Date: _____

Resolution: _____ Disposition: _____ QA: N/C Closed: _____ Date: _____

NCR:		WORK ORDER NON-CONFORMANCE (NCR)						
DATE	STEP	Description of NC Section A	Corrective Action Section B			Verification Section C	Approval Chief Eng	Approval QC Inspector
			Initial Chief Eng	Action Description Chief Eng	Sign & Date			

NOTE: Date & initial all entries

H:\FORMS\Quality Assurance\approved QA\NCRWO RevE